American Concrete Industries

1717 Stillwater Ave. Veazie, ME. 04401

www.americanconcrete.com

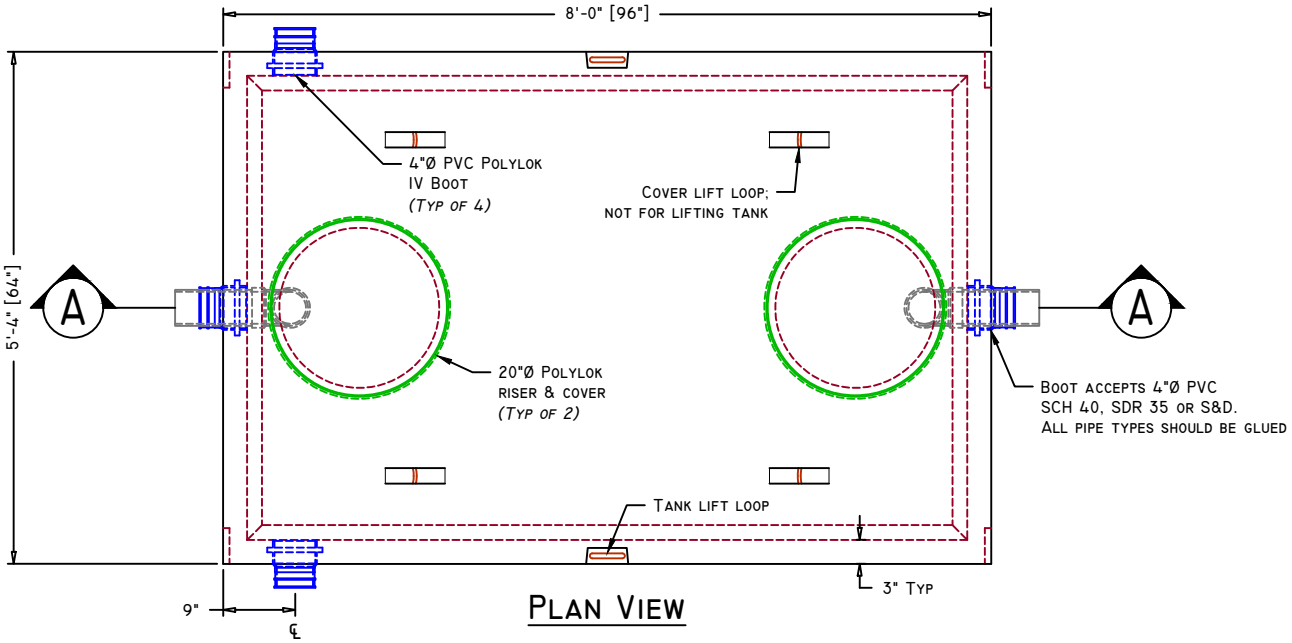

PLAN VIEW

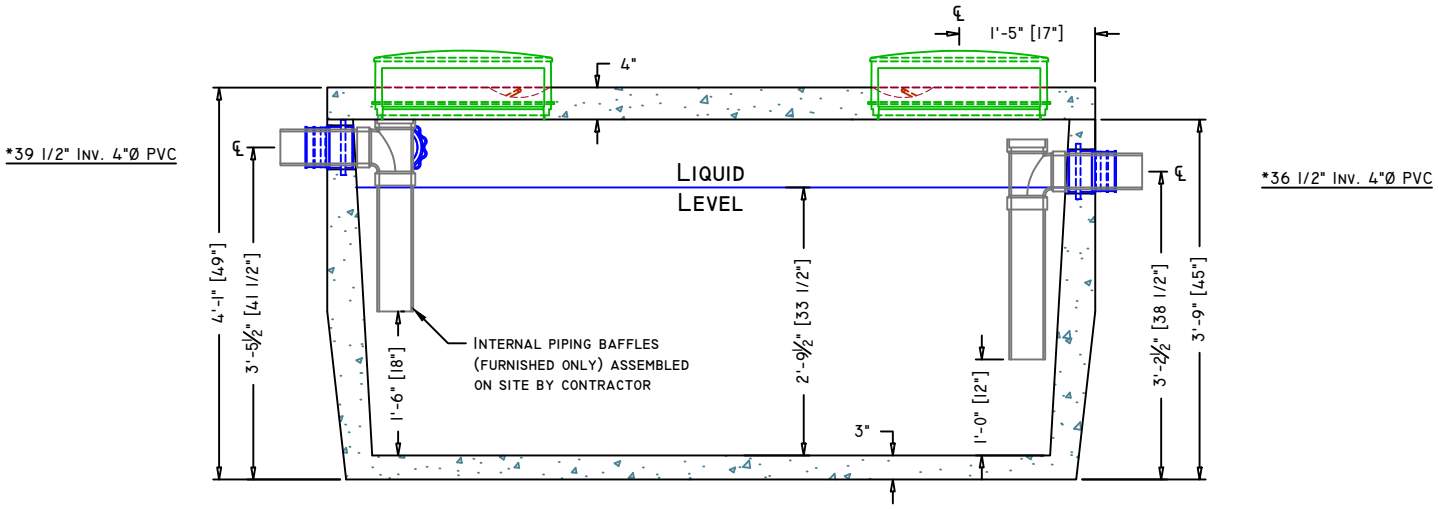

SECTION A-A

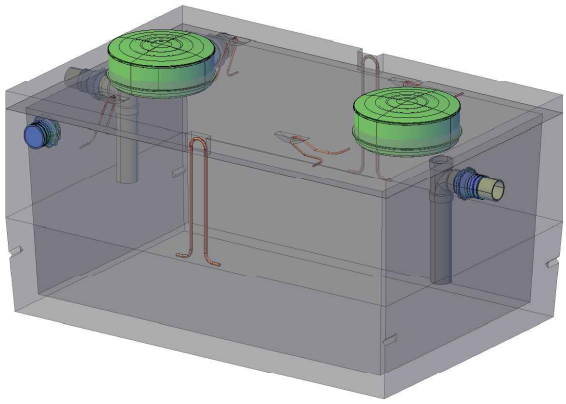

CONCEPTUAL VIEW

SCALE: NTS

*Dimension is taken from bottom of tank

Manufacturing Notes

1.1. CONCRETE COMPRESSIVE STRENGTH: 5000PSI @ 28 DAYS
1.2. AIR ENTRAINMENT: 4-6%
1.3. GRADE 60 REINFORCEMENT
1.4. STRUCTURAL FIBER REINFORCED BASE
1.5. TANKS SHOULD BE PUMPED EVERY 3-5 YEARS, DEPENDING ON USE
1.6. NEVER USE SEPTIC CLEANING AGENTS
1.7. DESIGNED FOR PEDESTRIAN LOAD RATING ONLY
1.7.1. SPECIFY H20 FOR BURIAL DEPTHS > 3'-6"
1.8. ALL TANK PENETRATIONS ARE INTEGRALLY CAST
1.9. ALL JOINTS SEALED W/ BUTYL RUBBER JOINT SEALANT

Physical Specifications:

Cover Weight:	**2,355 lbs**
Tank Weight:	**5,740 lbs**
Total Weight:	**8,095 lbs**
Available Capacity:	**890 gal (max)**
Working Capacity:	**688 gal (4"Ø PVC)**

750GAL LB 1 COMP. GT W/ POLYLOK RISERS & COVERS		DRAWN DATE: 06/9/2016	SCALE: 1/2" = 1'-0" UNLESS OTHERWISE NOTED
ACI CATALOG DRAWINGS	ITEM#: XXXXXX	REVISION #:	REVISION DATE: