American Concrete Industries

1717 Stillwater Ave. Veazie, ME. 04401

www.americanconcrete.com

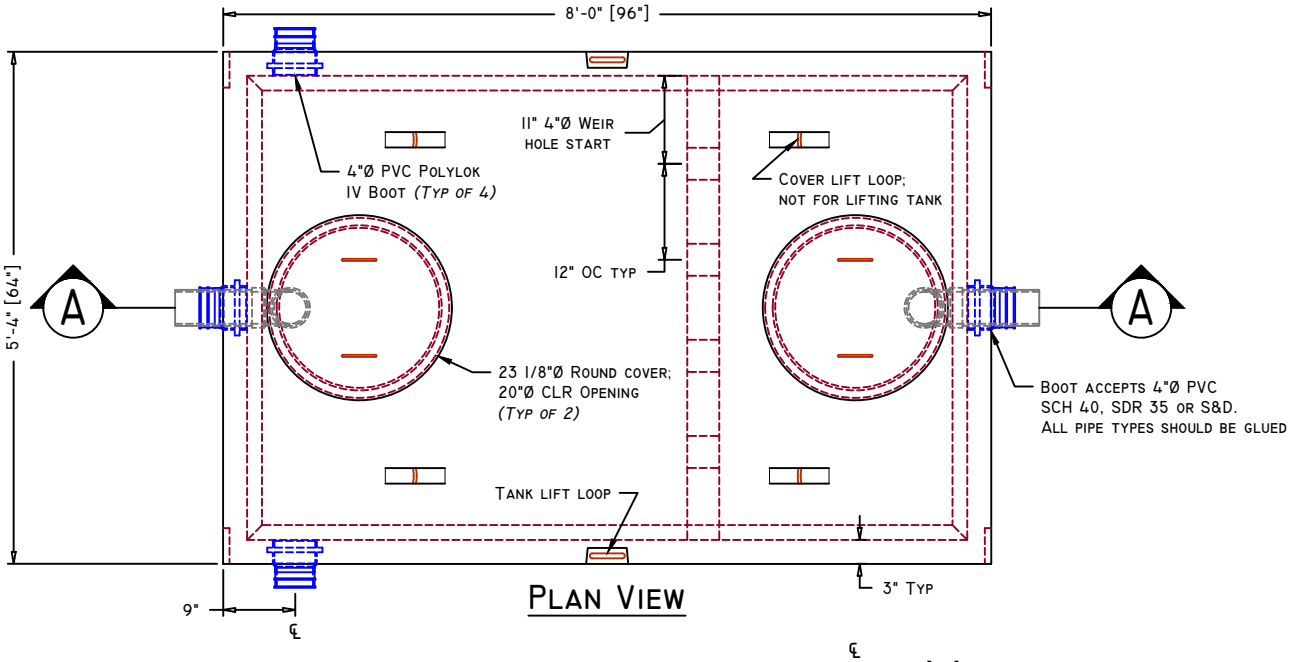

Plan View

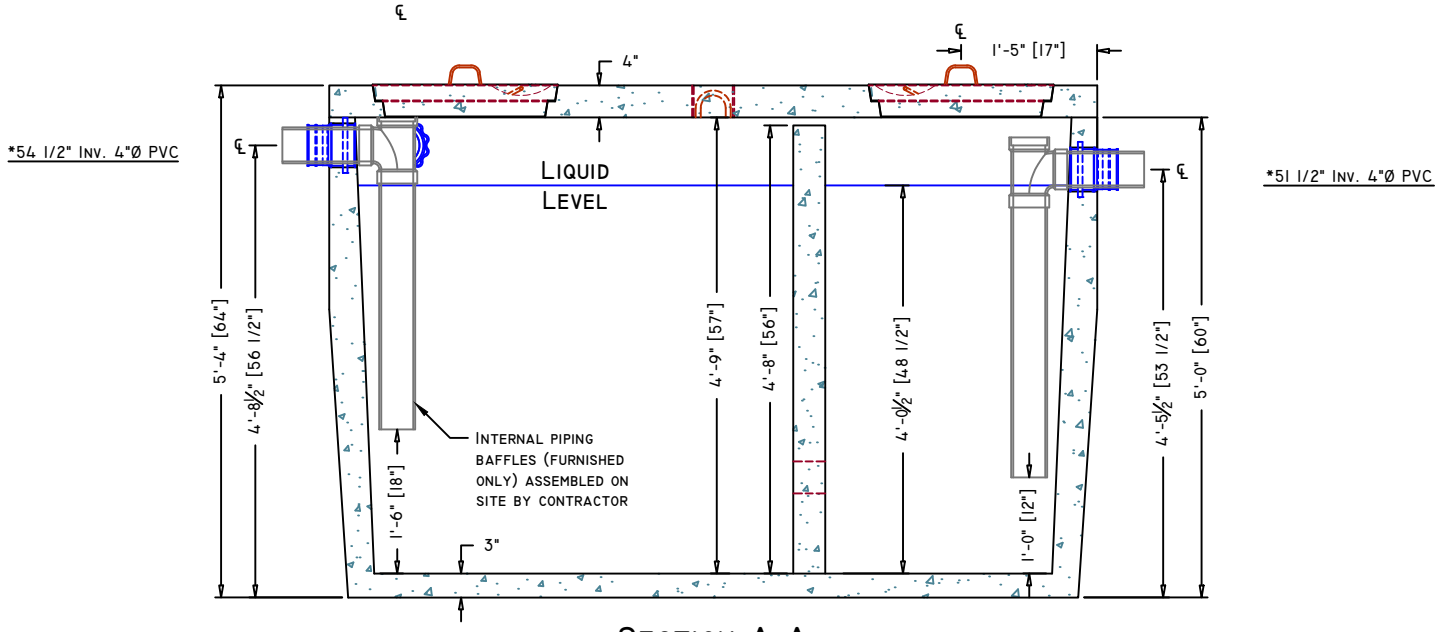

Section A-A

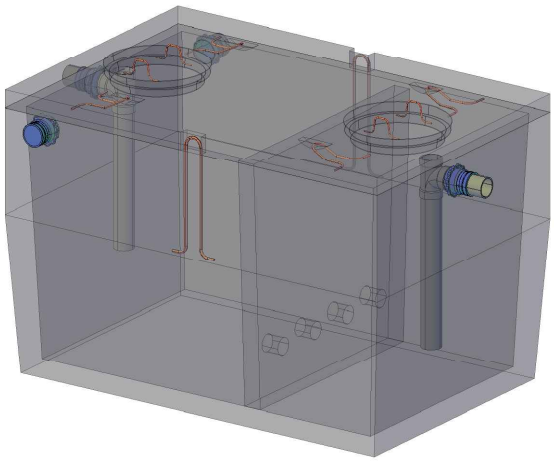

Conceptual View

Scale: NTS

*Dimension is taken from bottom of tank

Manufacturing Notes

1.1. Concrete Compressive Strength: 5000psi @ 28 Days
1.2. Air Entrainment: 4-6%
1.3. Grade 60 Reinforcement
1.4. Structural fiber reinforced base
1.5. Tanks should be pumped every 3-5 years, depending on use
1.6. NEVER use septic cleaning agents
1.7. Designed for pedestrian load rating only
1.7.1. Specify H20 for burial depths > 3'-6"
1.8. All tank penetrations are integrally cast
1.9. All joints sealed W/ butyl rubber joint sealant

Physical Specifications:

Cover Weight:	**2,125 lbs**
Tank Weight:	**8,070 lbs**
Total Weight:	**10,195 lbs**
Available Capacity:	**1,142 gal (max)**
Working Capacity:	**960 gal (4"Ø PVC)**

1000gal Reg. Dual Compartment Grease Trap		Drawn Date: 05/26/2015	Scale: 1/2" = 1'-0" Unless otherwise noted
ACI Catalog Drawings	Item#: xxxxxx	Revision #:	Revision Date: