American Concrete Industries

1,000 Gallon Dual Compartment Grease Trap - H-20

WWW.AMERICANCONCRETE.COM
1717 Stillwater Ave.
Veazie, ME. 04401
Tel: (207) 947-8334
Fax: (207) 947-3580

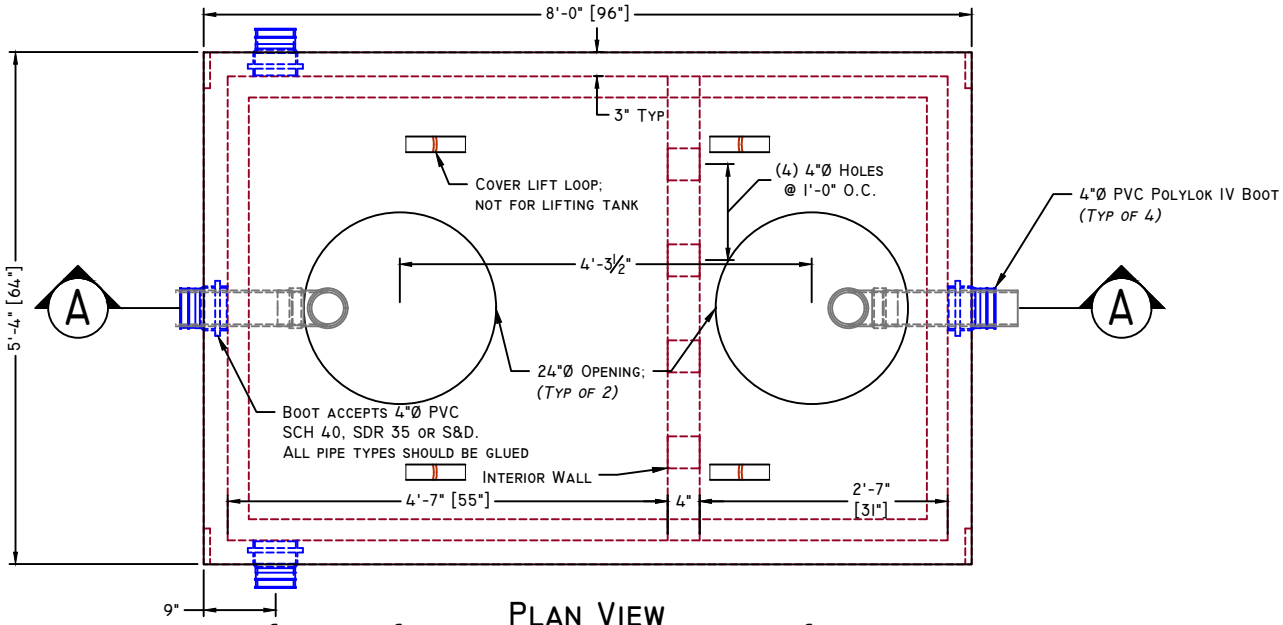

Plan View

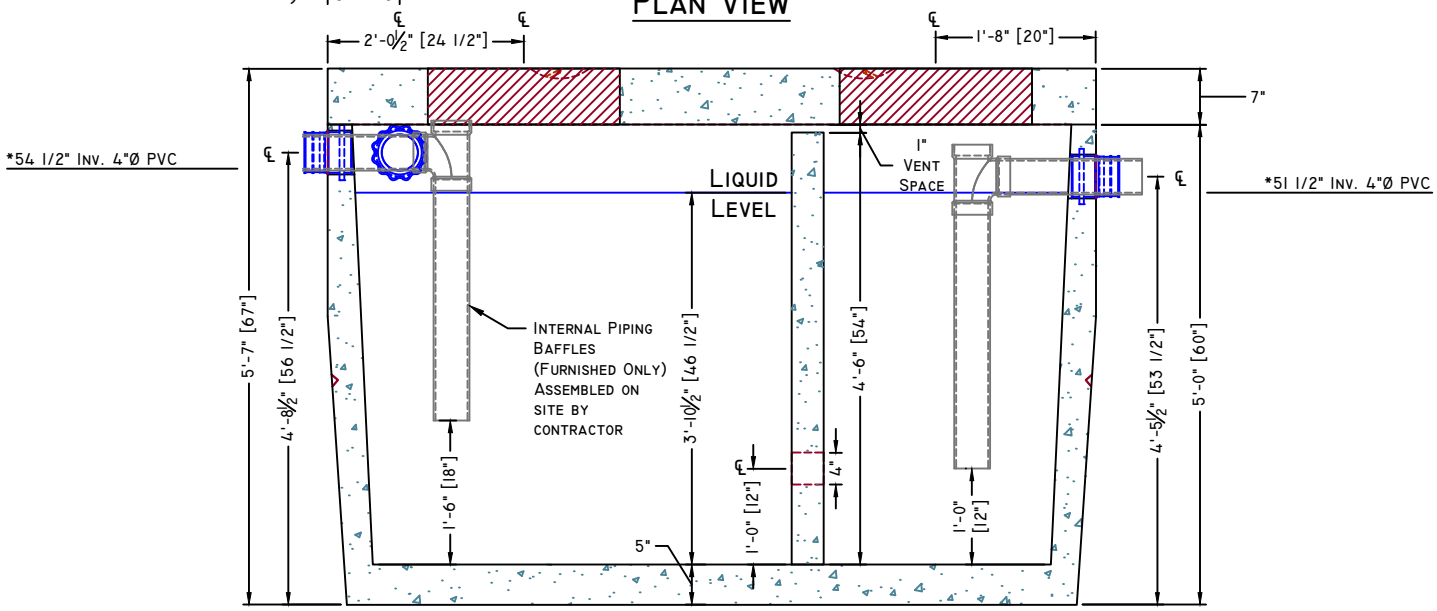

Section A-A

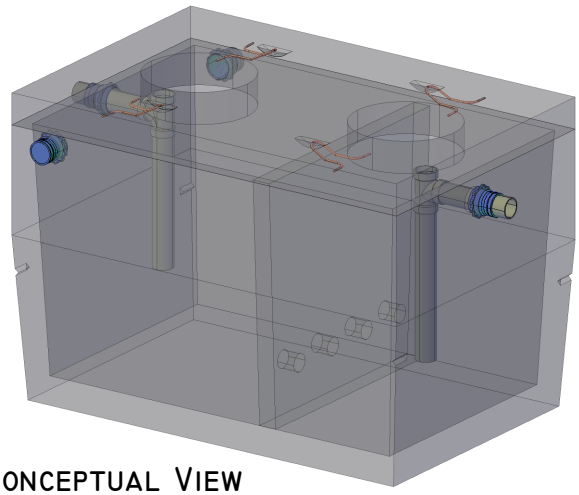

Conceptual View

Scale: NTS

*Dimension is taken from bottom of tank

Manufacturing Notes

- 1.1. Concrete Compressive Strength: 5000psi @ 28 Days
- 1.2. Air Entrainment: 4-6%
- 1.3. Grade 60 Reinforcement
- 1.4. Structural fiber reinforced base
- 1.5. Tanks should be pumped every 3-5 years, depending on use
- 1.6. NEVER use septic cleaning agents
- 1.7. Designed H-20 Load rating
  - 1.7.1. Specify H20 for burial depths > 5'
- 1.8. All tank penetrations are integrally cast
- 1.9. All joints sealed W/ butyl rubber joint sealant

Physical Specifications:

Cover Weight:	3,180 lbs	
Tank Weight:	7,757 lbs	Item# 291110
Interior Wall:	1,020 lbs	Item# 290860
Total Weight:	11,957 lbs	
Available Capacity:	1,174 gal (max) W/O Int. Wall	
Working Capacity:	920 gal (4"Ø PVC) W/ Interior Wall	

Commercial | Wastewater | Grease Traps | 1000gal		Scale: 1/2" = 1'-0" Unless otherwise noted	Revision #: 0.00
American Concrete Industries Catalog	Item#s: See Notes	Drawn Date: 8/20/2019 ABL	Revision Date: 00/00/00