American Concrete Industries

2000 Gal Reg Dual Grease Trap

ACI Catalog 2013

Commercial Tanks | Item# 8851

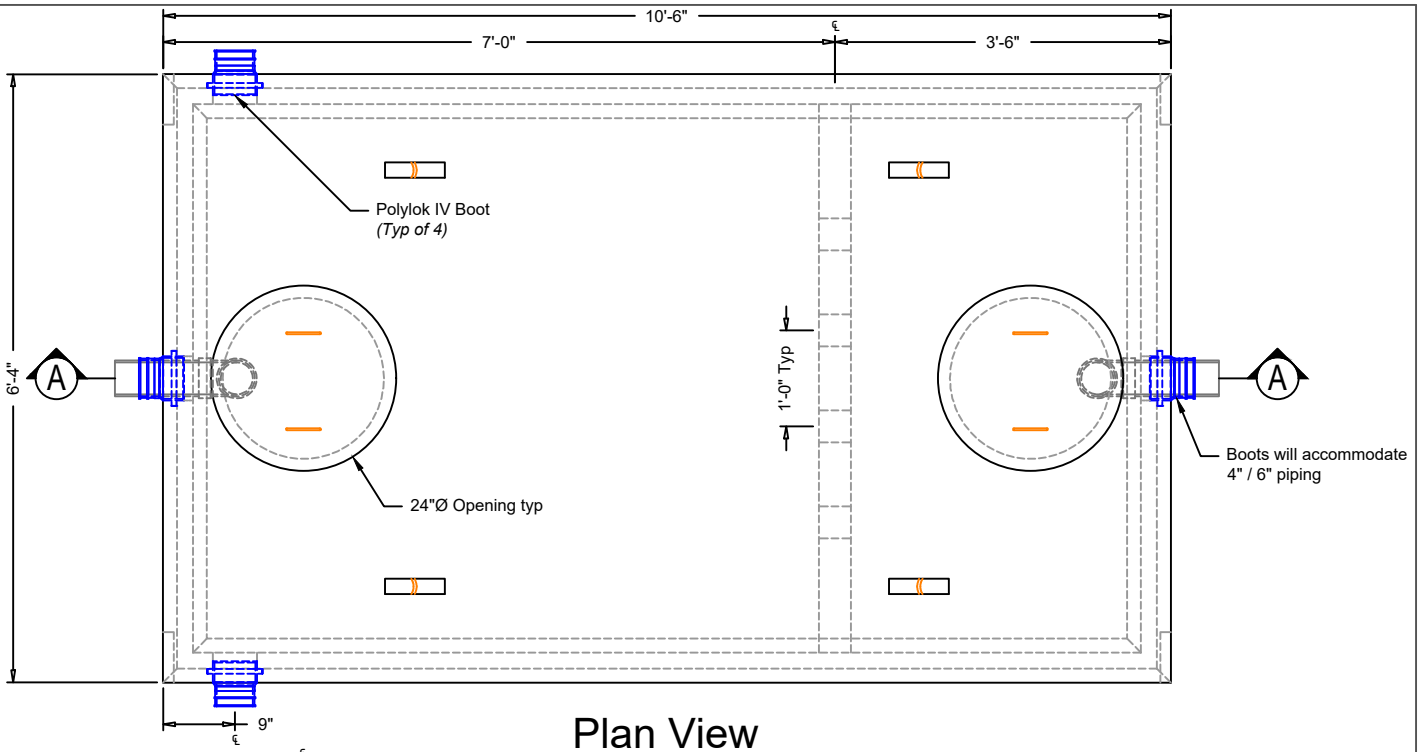

Plan View

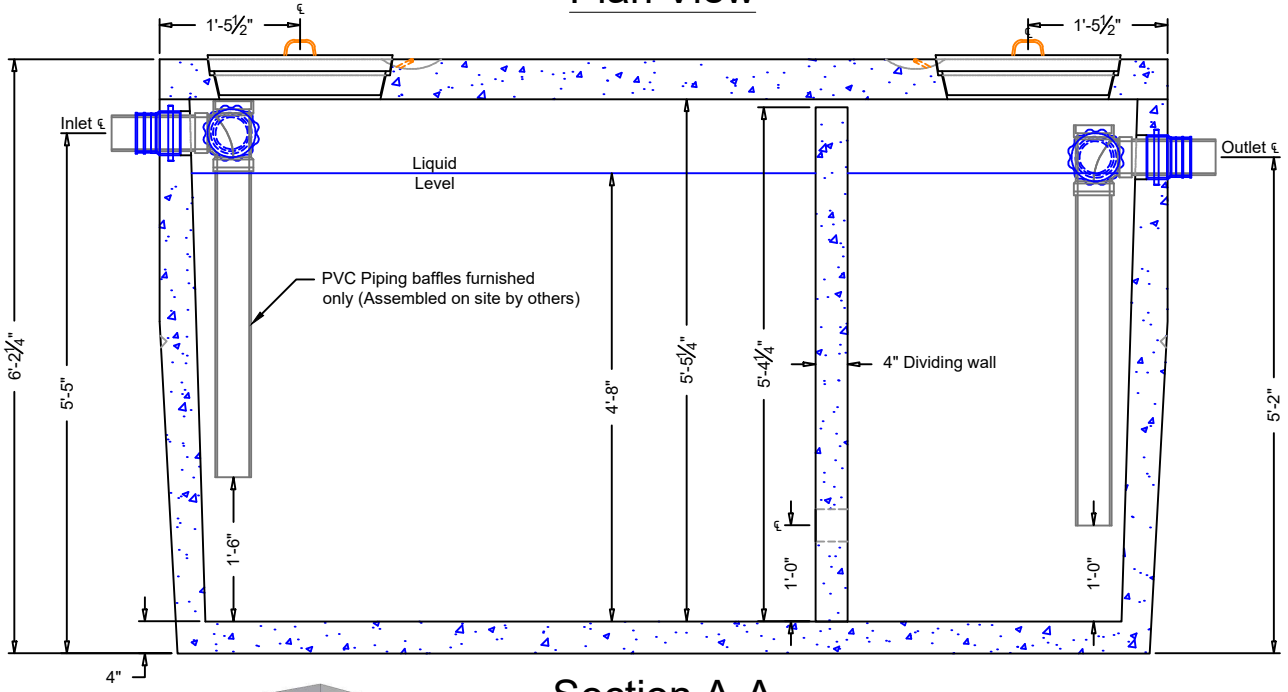

Section A-A

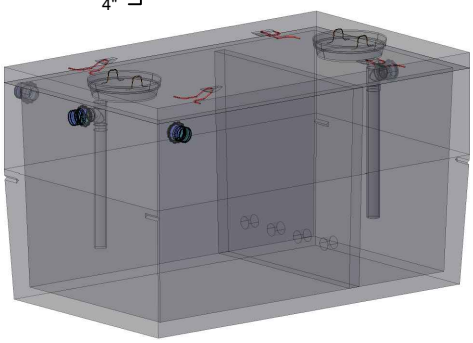

Conceptual View - NTS

Manufacturing Notes

1.1. Concrete Compressive Strength: 5,000 PSI
1.2. Air Entrainment: 4-6%
1.3. Grade 60 Reinforcement
1.4. Structural Fiber Reinforced Base
1.5. Designed for pedestrian loading only
1.5.1. Specify H20 for burial depths > 3'-6"
1.6. All tank penetrations are integrally cast
1.7. All joints plant sealed W/ butyl rubber joint sealant

Physical Specifications:

Total Weight:	**17,610 lbs**
Working Capacity (w/ baffle)	**1,805 gal**
Available Capacity:	**2,191 gal (max)**

www.americanconcrete.com
1717 Stillwater Ave.
Veazie, ME 04401
Tel: (207) 947-8334 | Fax: (207) 947-3580
1022 Minot Ave
Auburn, ME 04210
Tel: (207) 784-1388 | Fax: (207) 783-4039

Scale: 1/2" = 1'-0" Unless otherwise noted

Revision #:

Drawn Date: 11/06/2013 SSM

Revision Date: