American Concrete Industries

2000 Gallon Regular Holding Tank

WWW.AMERICANCONCRETE.COM
1717 Stillwater Ave.
Veazie, ME. 04401
Tel: (207) 947-8334
Fax: (866) 414-9083

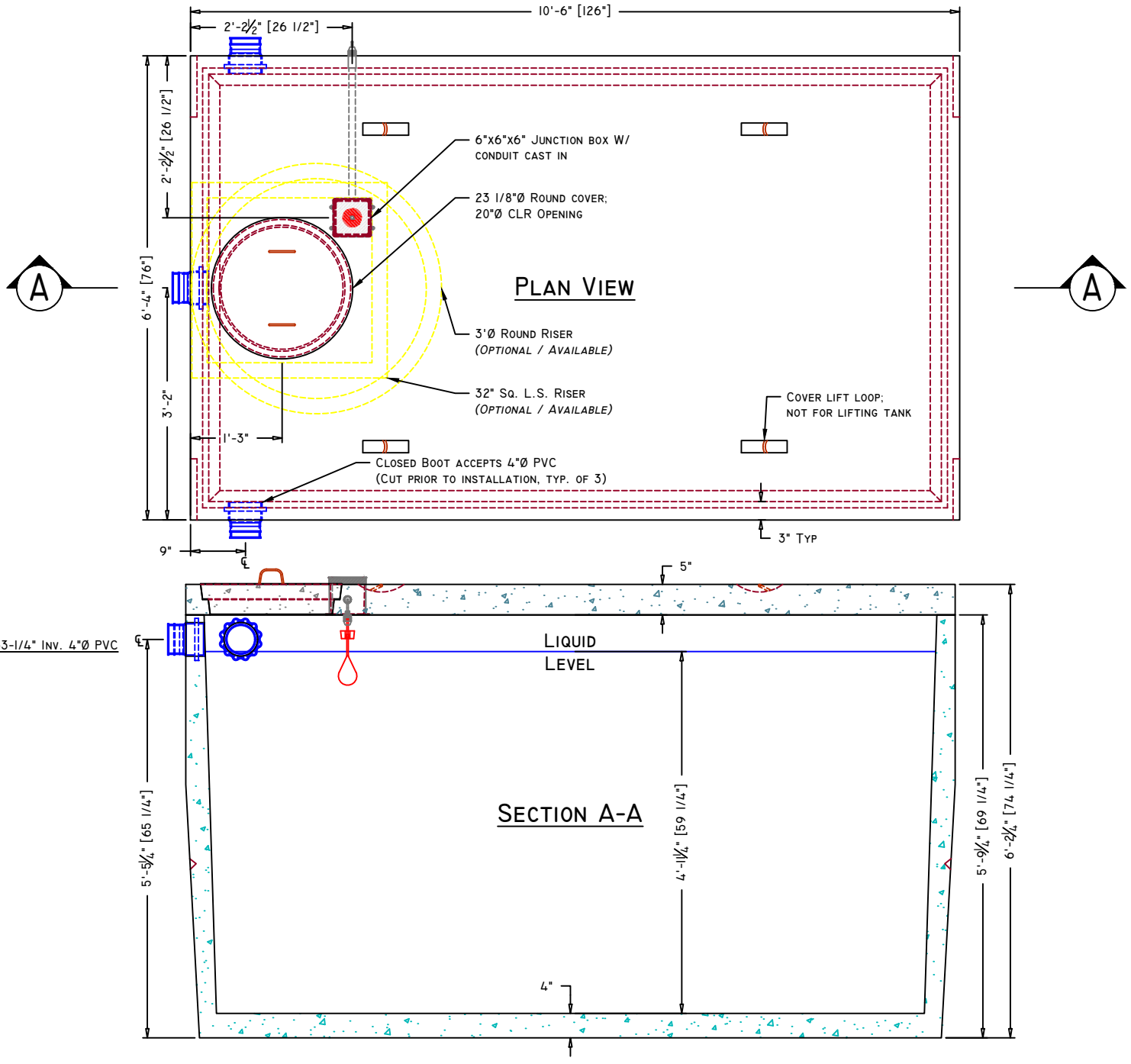

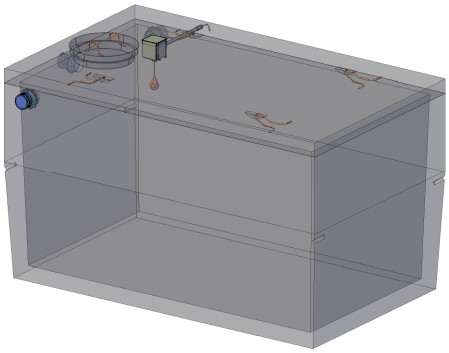

Conceptual View

Scale: NTS

Physical Specifications:

Cover Weight:	4,150 lbs
Tank Weight:	12,040 lbs
Total Weight:	16,190 lbs
Available Capacity:	2,189 gal (max)
Working Capacity:	1,971 gal (4"Ø PVC)

*Dimension is taken from bottom of tank

Manufacturing Notes

1.1. Concrete Compressive Strength: 5000psi @ 28 Days
1.2. Air Entrainment: 4-6%
1.3. Grade 60 Reinforcement
1.4. Structural fiber reinforced base
1.5. Tanks should be pumped AS NEEDED/ or at Minimum Yearly, depending on use
1.6. NEVER use septic cleaning agents
1.7. Designed for pedestrian load rating only
1.7.1. Specify H20 for burial depths > 3'-6"
1.8. All tank penetrations are integrally cast
1.9. All joints sealed W/ butyl rubber joint sealant

Residential | Holding tanks | 2000gal	Scale: 1/2" = 1'-0" Unless otherwise noted	Revision #:0.01
American Concrete Industries Catalog Item#293100	Drawn Date: 10/26/2015 SSM/ABL	Revision Date: 10/24/23