American Concrete Industries

24"Ø Light Pole w/ 36" Sq. Base

24"Ø Light Pole w/ 36" Sq. Base x __ Ft. __ In. High

Std. Drawings: Utility\LPB\24in | Item#:

Ht.: 4'-0"	Ht.: 4'-6"	Ht.: 5'-0"	Ht.: 5'-6"	Ht.: 6'-0"	Ht.: 6'-6"	Ht.: 7'-0"	Ht.: 7'-6"	Ht.: 7'-9"
#: 324200	#: 324250	#: 324300	#: 324350	#: 324400	#: 324450	#: 324500	#: 324550	#: 324575
Wt.: 2,768#	Wt.: 3,004#	Wt.: 3,240#	Wt.: 3,476#	Wt.: 3,712#	Wt.: 3,948#	Wt.: 4,184#	Wt.: 4,420#	Wt.: 4,538#

NOTE: Item Numbers Listed for Items WITHOUT Added Base; Project Mgr to Indicate Ext. Base on W.O. and S.O.

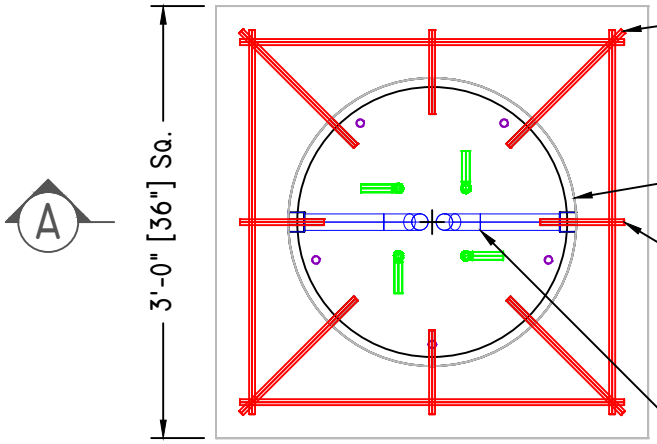

Plan View

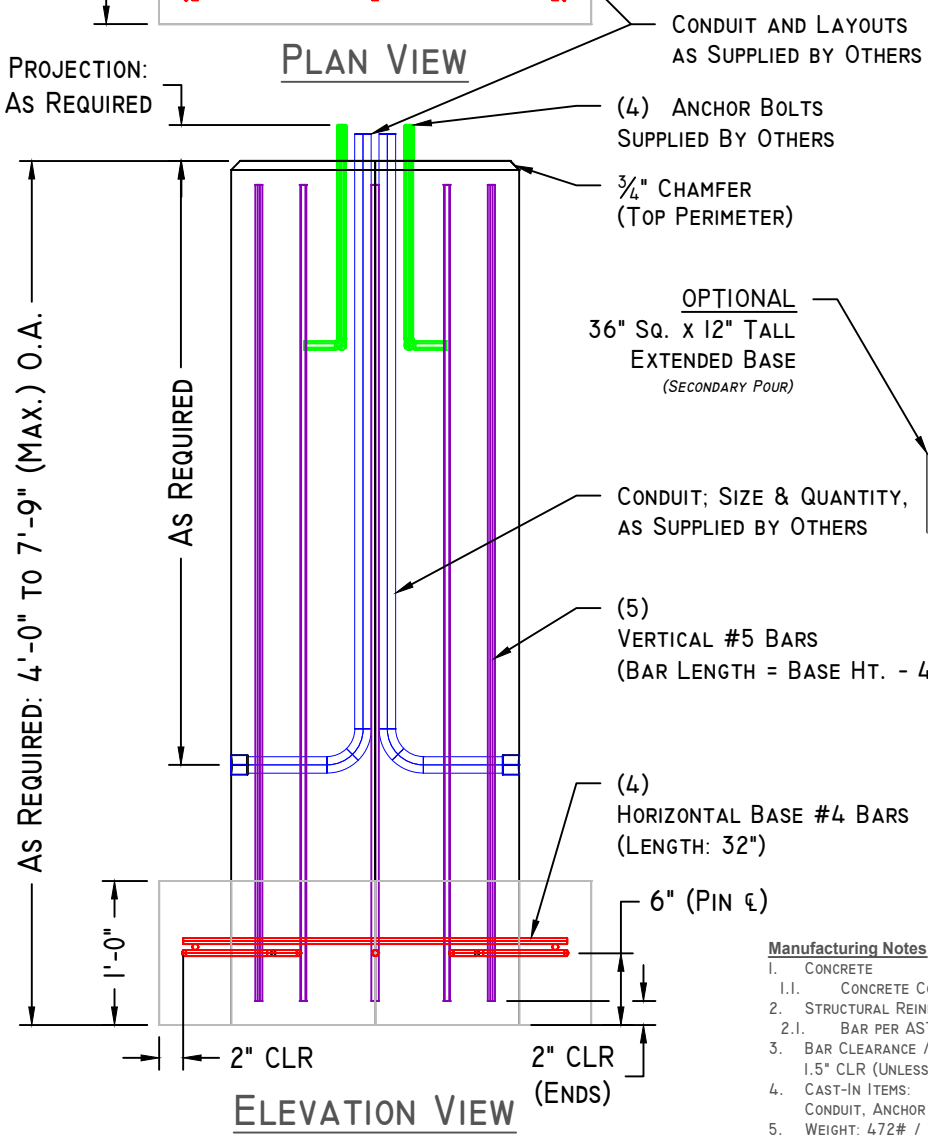

Elevation View

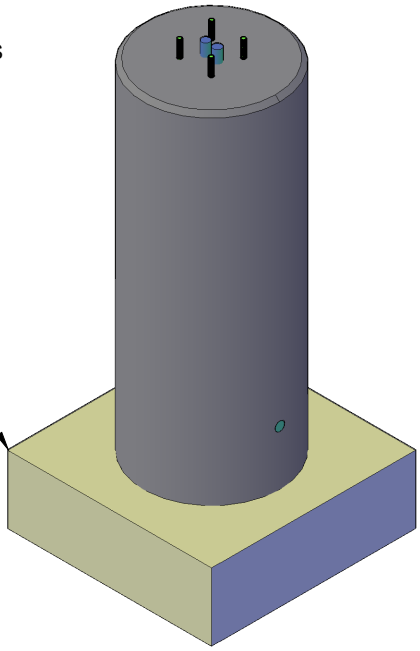

Conceptual View

Scale: NTS

Manufacturing Notes

1. Concrete
   - 1.1. Concrete Compressive Strength: 5,000psi, Air Entrainment: 4-6%
2. Structural Reinforcement:
   - 2.1. Bar per ASTM A615, Grade 60; Reinforcing Fibers @ 3 lbs/ Cu. Yd.
3. Bar Clearance / Protection:
   - 1.5" CLR (Unless otherwise noted)
4. Cast-In Items:
   - Conduit, Anchor Bolts & Bolt Pattern Template; to be Supplied by others.
5. Weight: 472# / V.F. Plus 880# for Added 36" Sq. Base

www.americanconcrete.com | Tel: 207-947-8334
1717 Stillwater Ave. Veazie, ME. 04401 | Fax: 866-414-9083

Scale: 3/4" = 1'-0" Unless otherwise noted | Revision #: 0.01 ABL

Drawn Date: 07/06/2012 | Revision Date: 04/29/22